36 416 000 **EUROSMART COSMOPOLITAN E CONCEALED BODY**

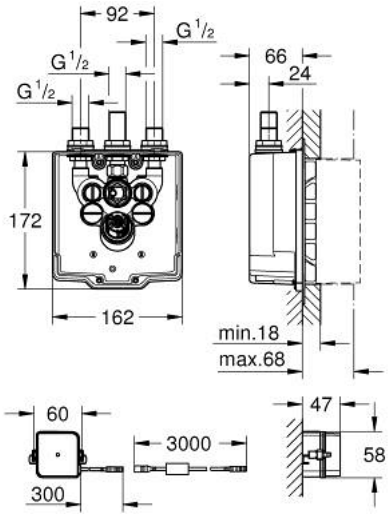

PRODUKTO APRAŠYMAS

- for shower
- with integrated pre-adjustable thermostatic mixer
- suitable for IR-set 36 415 000
- 2 stop valves
- Grohtherm Micro integrated
- non-return valves with filters
- connection housing for power supply

36 416 000 **EUROSMART COSMOPOLITAN E CONCEALED BODY**

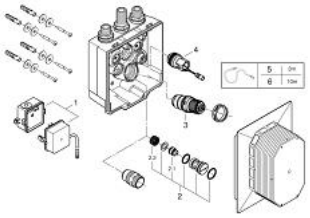

ATSARGINĖS DALYS , rugsėjo 2014 – dabar

1: Switching power supply (Produkto nr. 42470000)

2: Non-return valve (Produkto nr. 43433000)

2.1: Non-return valve (Produkto nr. 4343200M)

2.2: Dirt strainer (Produkto nr. 4329600M)

3: Thermostatic compact cartridge 1/2" (Produkto nr. 47948000)

4: Solenoid valve (Produkto nr. 42472000)

5: Power extension cable (Produkto nr. 36340000)

6: Power extension cable (Produkto nr. 36341000)*

* pasirenkami priedai